GÜTHLE

IDEA AND SYSTEMS

QUICK DIE CHANGE CLAMP TECHNOLOGY

DILOS SWING SINK CLAMPS

CLAMPING DIES
IN THE CENTRE OF FORCES
DILOS SWING SINK CLAMPS

Integrated clamping technology
DILOS Swing Sink Clamps are hydraulically actuated stationary clamping devices. They are recess mounted into the press bed or into the slide of a press.

The dies must be prepared for this clamping technology (see *´Die-related measures´*).

It is possible to slide dies having identical format base plates into the exact clamping position with the aid of lateral guides fitted on both sides of the press bed. For dies with different base plates, it is possible to use slot guiding elements. Alternatively, sub plates can be used.

Version A
with retractable tie rod

Version B
for the press slide ram

Version A
Installation within the press bed
For the work position 'Change Die', the tie rods of the DILOS Swing Sink Clamps are lowered beneath the level of the press bed.

After loading and positioning the die, the ROLLBLOC die lifters are lowered. Subsequently, the tie rods are guided into the die plates.

Program-controlled clamping and releasing
This makes DILOS Swing Sink Clamps ideal for automating the die changing process on presses. DILOS Swing Sink Clamps thus constitute the perfect complement to state-of-the-art die changing systems such as DILOS SHUTTLE and DILOS TRUCK.

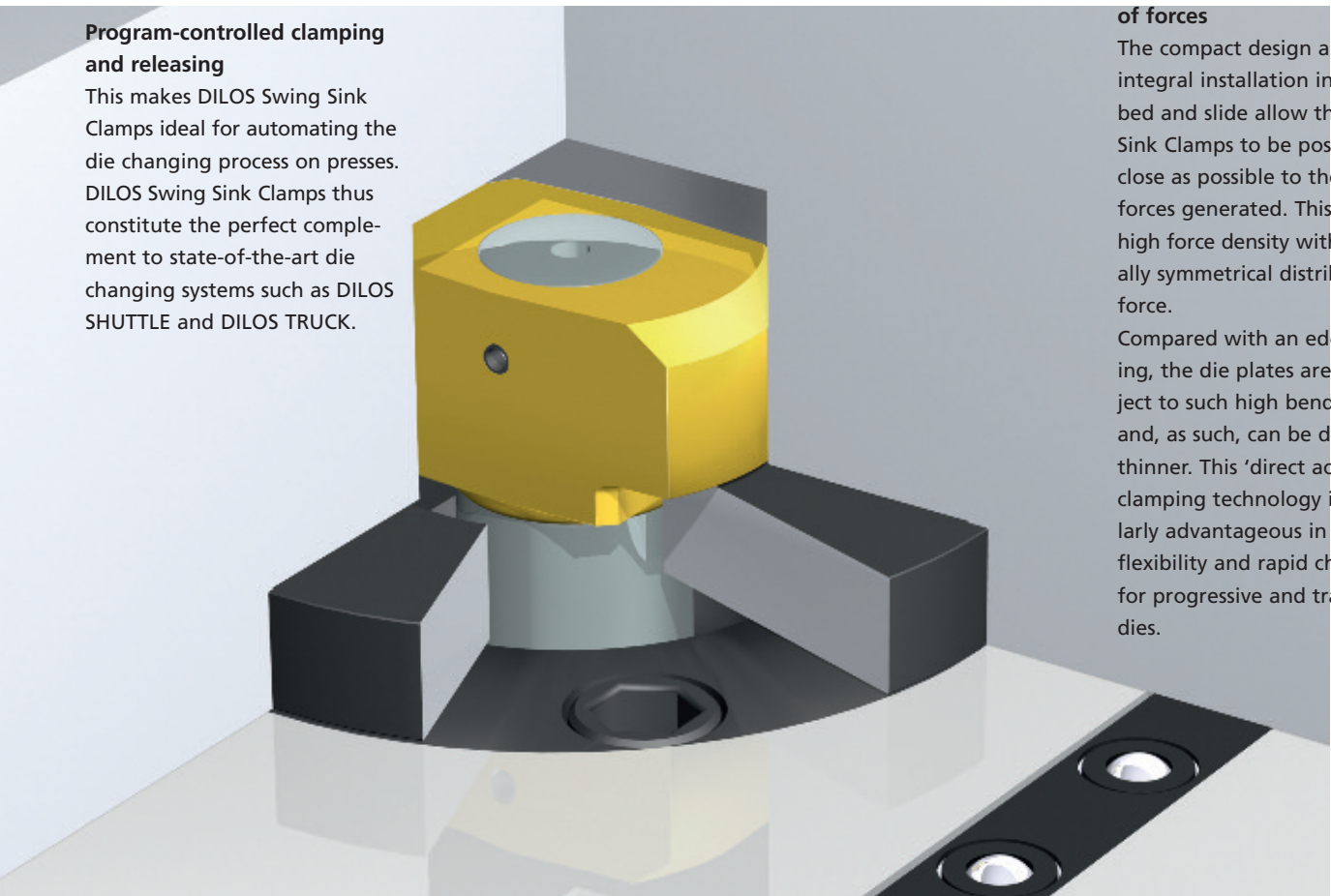

Clamping within the centre of forces
The compact design and the integral installation in the press bed and slide allow the Swing Sink Clamps to be positioned as close as possible to the tensile forces generated. This permits a high force density with a virtually symmetrical distribution of force.
Compared with an edge clamping, the die plates are not subject to such high bending forces and, as such, can be designed thinner. This 'direct acting' clamping technology is particularly advantageous in terms of flexibility and rapid changing for progressive and transfer dies.

DIGITAL FUNCTION CONTROL UNIT

DILOS CONTROL BOX

Version B
For installation within the slide
Within the slide it is generally no longer necessary to guide the tie rods in flush.
For this reason, version B of the DILOS Swing Sink Clamp has only a short stroke for clamping and releasing. In case of low shut height it is possible to use version A within the slide ram as an alternative.

Cover side, hydraulic ports version R

Hydraulic clamping and controlling
DILOS Swing Sink Clamps are operated with a hydraulic pressure of 400 (250) bar. For the connection, only 2 hydraulic lines are required. These can be connected both to the hydraulic unit of the press or to a separate hydraulic unit.
If the hydraulic supply is to be fed using no pipework versions **AF** or **BF** are used for flange connection.

Die-related measures
DILOS Die Flanges are suitable for die sub plates and top plates.
They provide a correct clamping basis and thus comply with the safety requirements.

As regards the dies themselves, all that is required are boreholes for housing the die flanges and for allowing room for manoeuvring the tie rods. Alternatively, tie rod pockets can be incorporated directly into the die plates.

DILOS Die Flange

Tie rod pocket in die plate

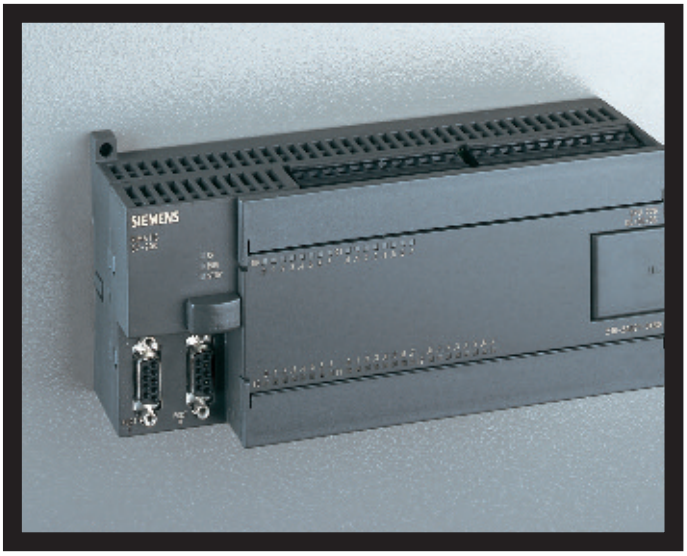

The monitored tie rod
DILOS Swing Sink Clamps are equipped with two proximity switches that allow the exact position of the tie rods to be monitored. The plug-in connection to the control box is located on the cover side of the clamp.

DILOS Control Box SZ1
The new control box is the digital function control centre for DILOS Swing Sink Clamps. Pre-programmed sequences are stored for **clamping** and **releasing**.
Prior to each work cycle of a press, the control unit first requires a release signal – including from the clamping technology. All the necessary position verifications relating to the clamps are executed centrally by the DILOS Control Box SZ1. This relieves the workload on the press's SPC.

The control box is pre-configured for 4, 8, 12, 16 or more DILOS Swing Sink Clamps.

GÜTHLE

DILOS

DILOS HYDRAULIC UNIT

Hydraulic clamping system
DILOS Swing Sink Clamps require 400 (250) bar operating pressure. When used on hydraulic presses, the press hydraulics can be used as supply.
If the DILOS Swing Sink Clamps are to be supplied by a separate hydraulic unit, we recommend using our DILOS Hydraulic Unit (400 bar).

The complete solution
This compact hydraulic unit is sufficiently dimensioned as to permit the supply of 12 swing sink clamps of type *SZS 101 version A*, for example.
The DILOS Hydraulic Unit can be operated either with 1 or 2 pumps. To ensure short clamp response times (particularly with regard to releasing), no more than 8 DILOS Swing Sink Clamps should be supplied by one hydraulic pump.

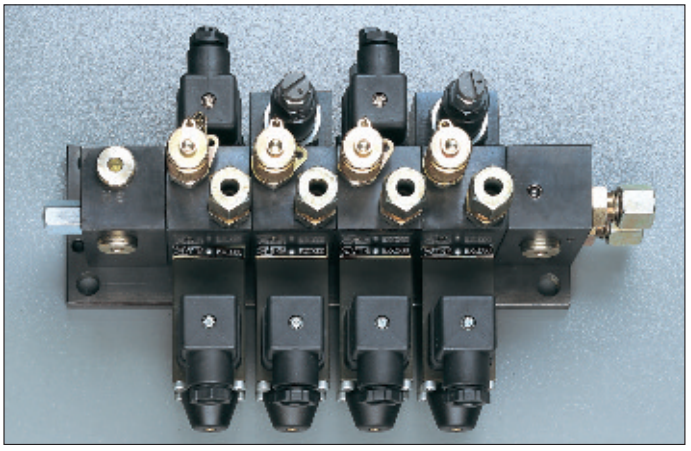

Hydraulic valves on a valve mounting plate
Typical arrangement of the slide hydraulic supply

DILOS Unit with 2 hydraulic pumps

DILOS valve sets
For controlling the DILOS Swing Sink Clamps, directional seated valves (24 VDC) from leading manufacturers are used.
The valves are mounted on a function block featuring a hydraulic test connection.
Valves featuring the 'Clamp' function are equipped with a pressure switch used for monitoring the clamping pressure.

If ROLLBLOC Die Lifters are also used on the press, these special valves can also be mounted on the same valve block.

Generally speaking, the valve block for the table area is mounted on the DILOS Hydraulic Unit.

For the swing sink clamps within the slide, the valves are positioned on a valve mounting plate within the slide area.
This reduces the number of moved hose unions.

THE NEW TIE ROD

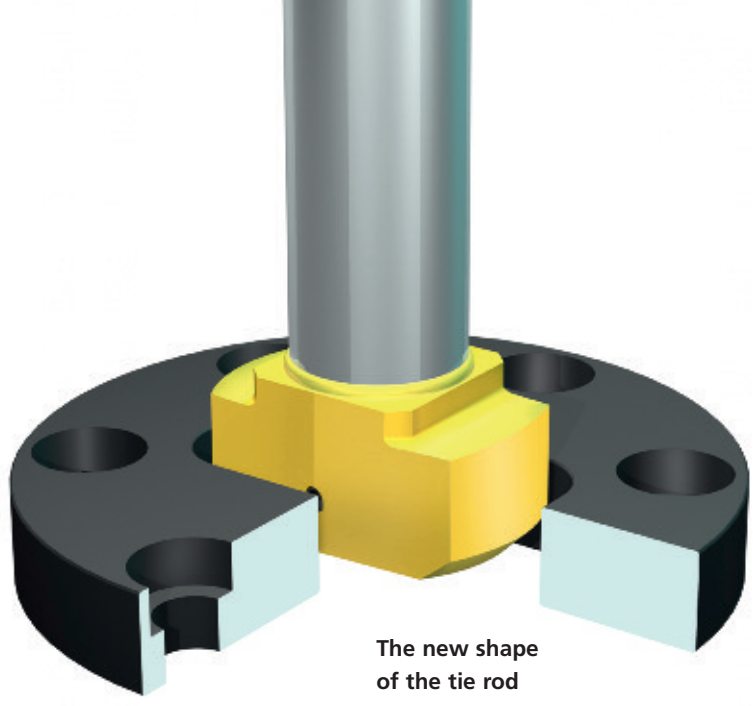

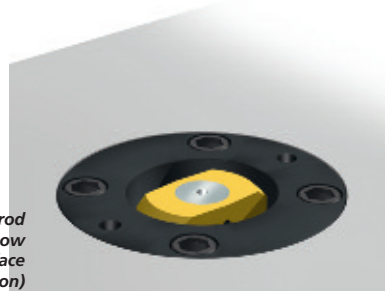

Tie rod lowered below bed surface (crossing position)

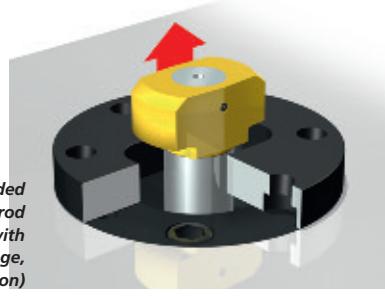

Extended tie rod (shown with clamping flange, section)

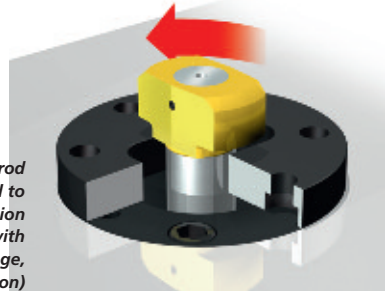

Tie rod swivelled to clamping position (shown with clamping flange, section)

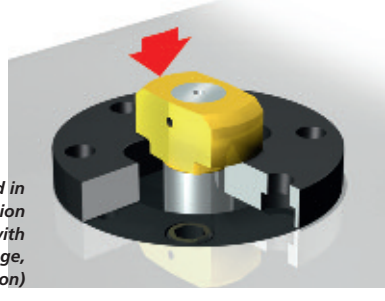

Tie rod in clamping position (shown with clamping flange, section)

The new kinematics of the tie rod

To ensure reliable functioning, it is important that the tie rod is not at risk of colliding when moving. The standard designs used to date in a version featuring 2 hydraulic lines (clamping and controlling) combine the lifting and turning motion into a functional sequence.

Thanks to an entirely new control logic, the new DILOS Swing Sink Clamp permits cleanly separated motional sequences. **The motions 'extending', 'swivelling' and 'clamping' are controlled separately**. This ensures that the tie rod can assume its exact clamping position.
Despite this, the DILOS Swing Sink Clamp also still only requires two hydraulic lines.

The new shape of the tie rod

In collaboration with the ESSLINGEN TECHNOLOGY UNIVERSITY, the force characteristics within the tie rod were structurally analysed and the design adapted in line with the new insights gained. In addition, a **flat square profile** has been integrated. This torsion prevention facility ensures that the tie rod extends cleanly on releasing the clamp.

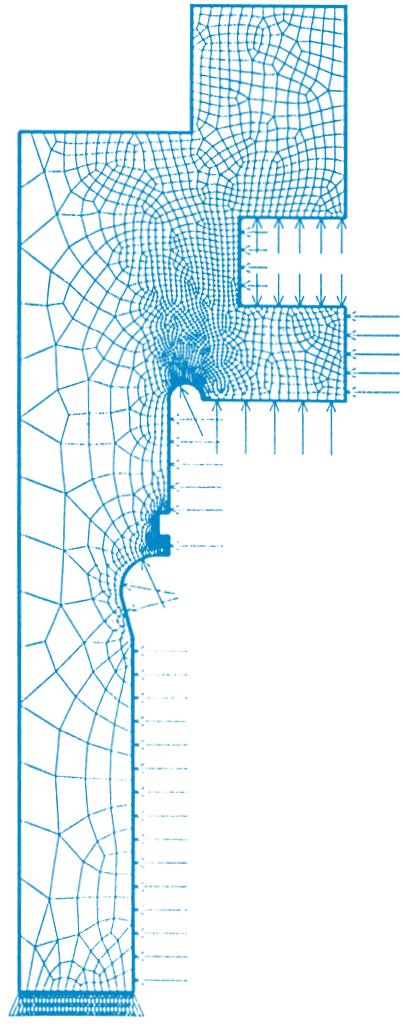

DILOS
SWING SINK CLAMPS

GÜTHLE
IDEA AND SYSTEMS
DILOS

Version A
for press bed and slide

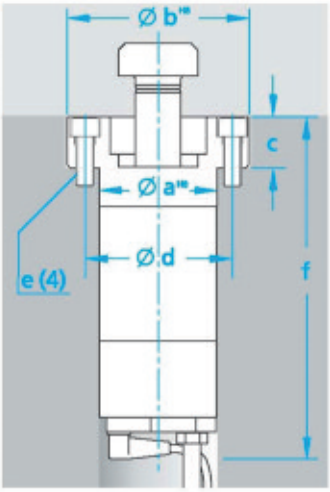

Version B for slide

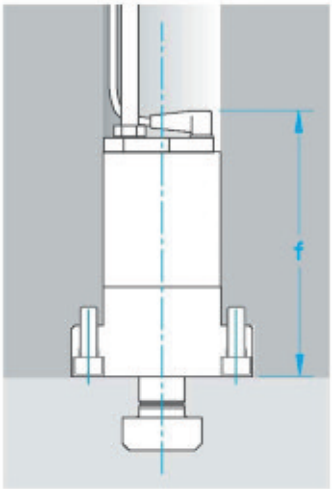

Die flange

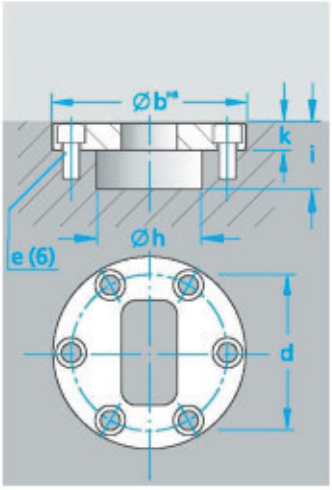

Flange side with tie rod

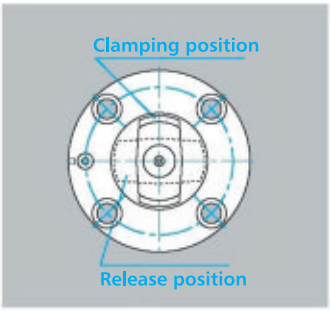

Connection side

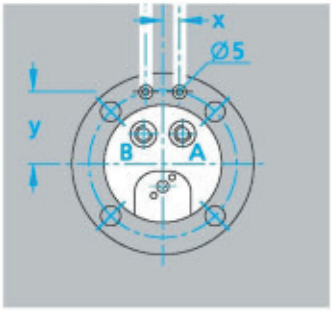

Hydraulic connection

The hydraulic connection can either be via pipes/hoses (connection on cover side) or by means of supply lines drilled in the press bed and slide.

Complete service

DILOS stands for DIE LOGISTIC SYSTEM. This die logistic system includes all presses and in-plant die service stations into the rationalisation system for die handling, die maintenance and die storage in press and punching plants.

Upon request, GÜTHLE will supply you with a complete solution – right down to the professional commissioning by our own plant fitters or by a service partner from your local area.

Consulting

The rationalisation effect of this manless clamping technology offers significant user benefits. For optimising the function and expenditure, it is advisable to contact us in the initial stages of your design process. To complement this die clamping technology, we can offer you our wealth of experience in the end-to-end automation of die changing processes.

We can provide you with professional advice – with no obligation on your part.

Technical Details

Type			SZS 61*			SZS 101*			SZS 161*		
Clamping force at 400 bar (250 bar)		kN	63 (40)			100 (63)			160 (100)		
Connection values											
Design type			A	AV	BV	A	AV	BV	A	AV	BV
Oil volume, clamping cycle		cm^3	28	41	27	46	71	41	101	167	70
Oil volume, release cycle		cm^3	77	91	37	161	185	44	442	499	84
Stroke, version 'A'		mm	45	52	12	58	66	12	67	75	13
Swivelling torque		Nm	90			100			120		
Ports A + B			G1/4"			G1/4"			G1/4"		
Installation dimensions - press bed / slide plate											
a	Pilot diameter x depth	mm	82 x 20			104 x 40			126 x 40		
b	Countersink diameter	mm	128			160			192		
c	Countersink depth	mm	37,5			45,5			68,5		
d	Pitch Circle	mm	104			130			156		
e	Tapped holes	mm	M12/25 tief			M16/30 tief			M20/35 tief		
f	Installation space x min	mm	280	280	215	300	300	215	360	360	250
Connection lines / flange connection F											
x	Hydraulic supply	mm	15			15			27,5		
y	Hydraulik supply (drill diameter 5 mm)	mm	50			63			73		
h	Pocket diameter, swivelling space	mm	65			80			100		
i	Pocket depth, swivelling space	mm	46	54	52	59	67	65	69	77	74
k	Countersink depth for die flange	mm	18,5			23,5			28,5		

***Full type designation, e.g. SZS 61 ARV-4**
Device Type: SZS, Performance class: 61 (101,161) kN,
Version: A, AV, BV (V with square)
Pressure connection: R (pipe), F (Flange, Channels)

Güthle Pressenspannen GmbH
Gottlieb-Haefele-Strasse 9
73061 Ebersbach
GERMANY
Tel.: +49 7163 99090
Fax: +49 7163 990990
E-mail: tech-info@guethle-swt.de
www.guethle-swt.de